FIAC SpA - via Vizzano, 23 - 40037 Pontecchio Marconi (Bo) - Italy - fiac@fiac.it

COMPACT 106

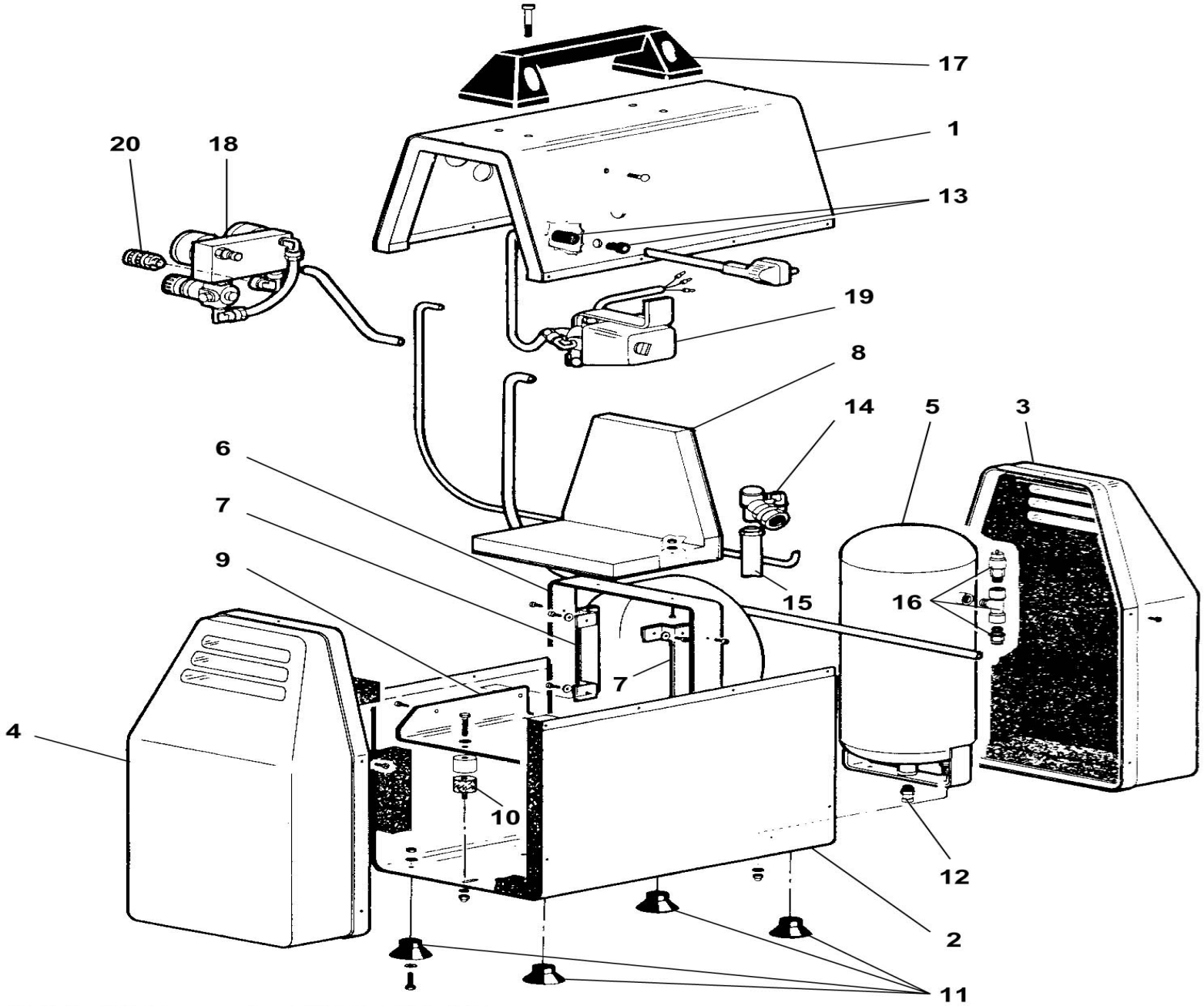

SINGLE PHASE V220-50/1 cod. 1703100000

MONOFASE V220-50/1 cod. 1703100000

www.fiac.it - all rights reserved

COMPACT 106

validity date - from 01/01/2000

Ref.	Code	Description	Quantity
1	1120003812	Upper housing	1
2	1120003811	Lower housing	1
3	1125020052	Carter	1
4	1125020053	Carter	1
5	1125150488	Tank	1
6	1127150301	Conveyor	1
7	1125160050	Conveyor bracket	2
8	1125020054	Separator	1
9	1125010088	Base	1
10	1127360417	Shock absorber	3
11	1127270001	Rubber Foot	4
12	1127130009	Discharge tap	1
13	1127500105	Cable clamp	1
14	1124090003	Non return valve	1
15	1127230417	Pipe	1
16	1127190202	Safety valve	1
17	1124030901	Handle	1
18	1124120021	Pressure reducer	1
19	1124050276	Pressure switch	1
20	1127130020	Tap	1

www.fiac.it - all rights reserved